TAHOE 60

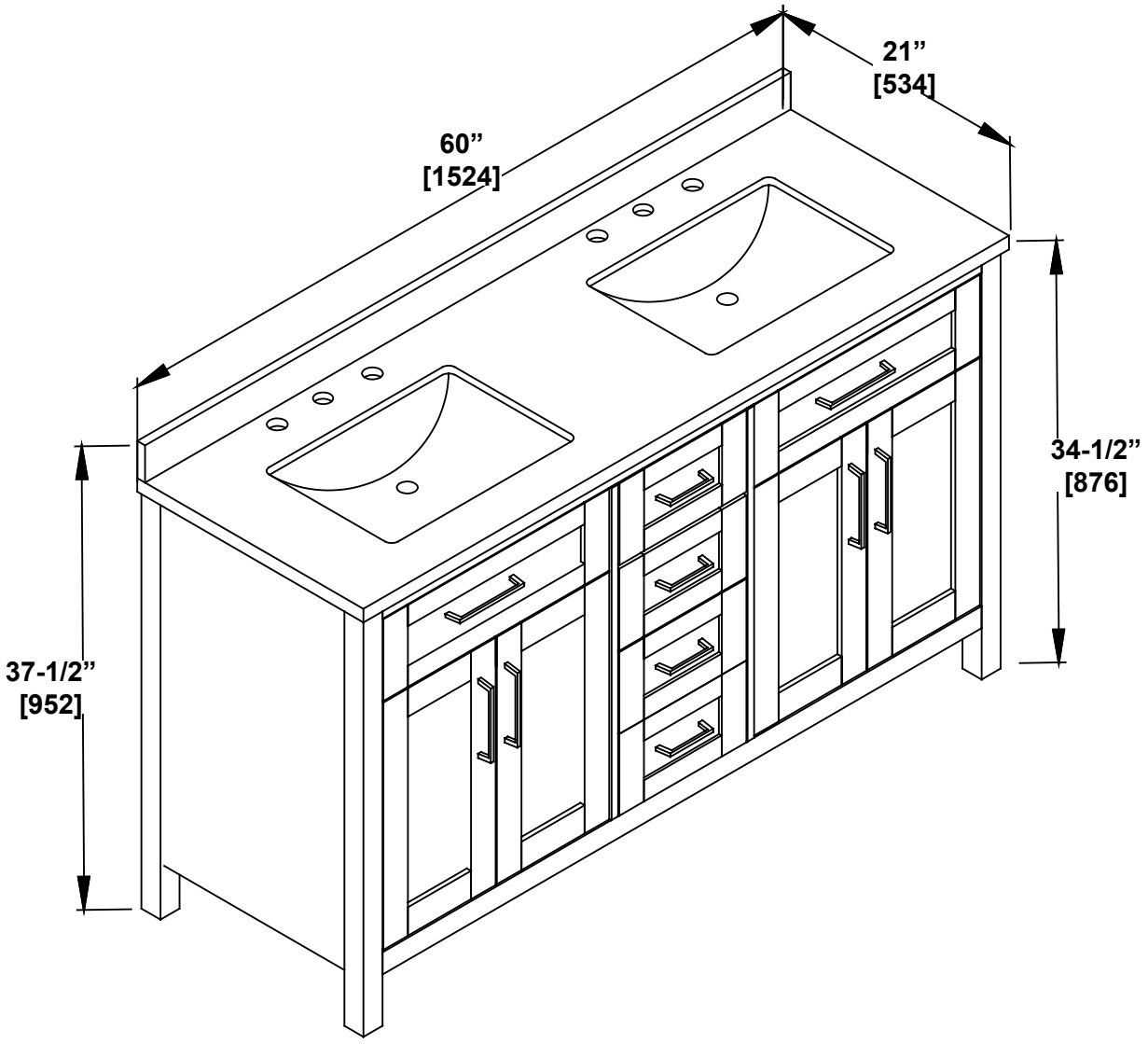
21”
[534]
60”
[1524]
34-1/2”
[876]
37-1/2”
[952]

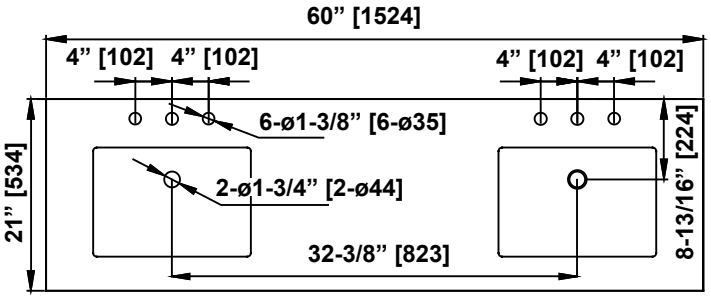
60” [1524]
4” [102]
4” [102]
4” [102]
4” [102]
6-ø1-3/8” [6-ø35]
2-ø1-3/4” [2-ø44]
21” [534]
8-13/16” [224]
32-3/8” [823]

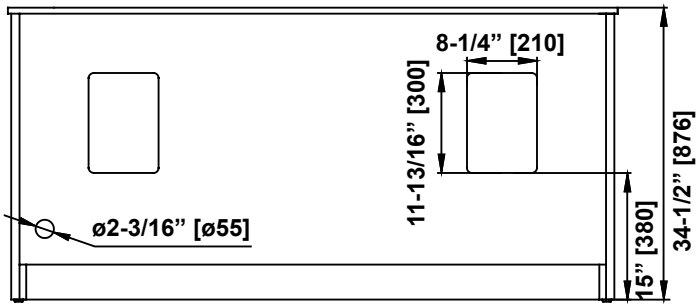
8-1/4” [210]
11-13/16” [300]
ø2-3/16” [ø55]
34-1/2” [876]
15” [380]